REVISION			
REV.	DESCRIPTION	DATE	BY
B	UPDATED DRAWING BORDER	03/08/06	J.S.B.

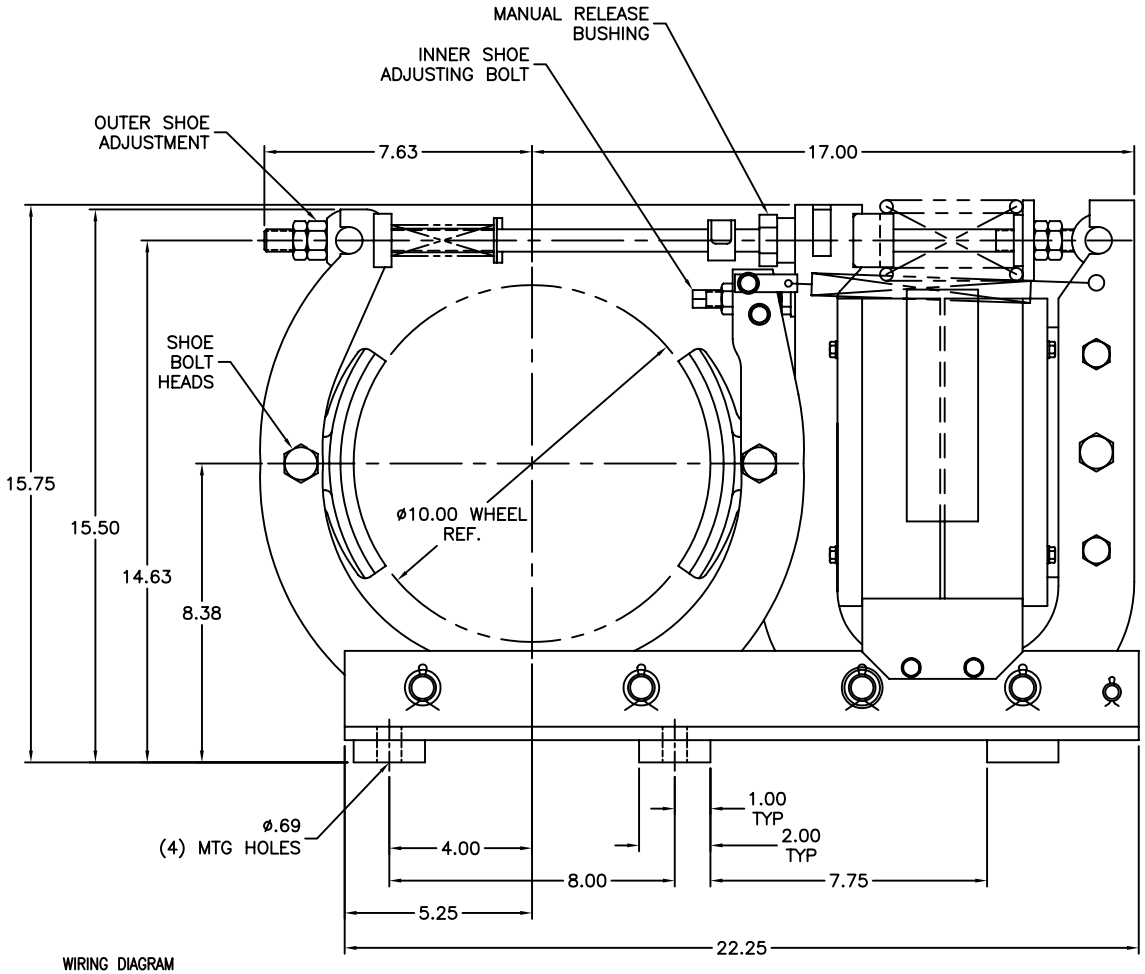

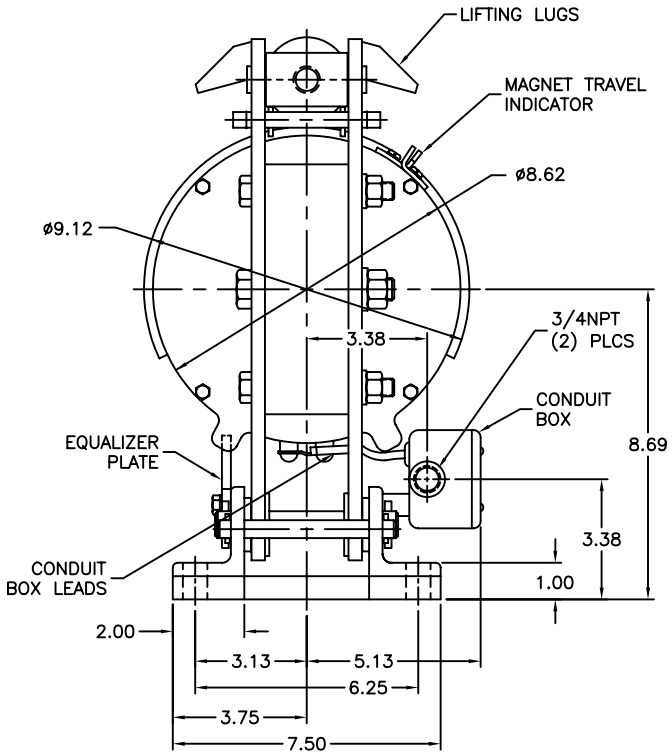

WIRING DIAGRAM
– SHUNT COIL –

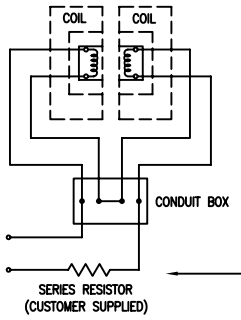

NON–STANDARD TORQUE RATINGS:	
TORQUE LB.FT.	MAIN SPRING LENGTH (INCHES)
130	4.31
150	4.25

COIL DATA – SHUNT OPERATION		
	CONTINUOUS OPERATION	INTERMITTENT OPERATION
VOLTS DC	32 VDC	40 VDC
AMPS	1.35 AMPS	1.68 AMPS
RESISTOR REQ'D 250VDC	137 OHMS	101 OHMS

NOTES:

1. STANDARD TORQUE RATING: 200 LB.FT. (MAIN SPRING LENGTH OF 4.00")
2. NORMAL MAGNET TRAVEL: .06"
3. WEIGHT OF BRAKE W/O WHEEL: 165 LBS.
4. STANDARD RIGHT HAND MOUNTING SHOWN. FOR LEFT HAND MOUNTING, POSITIONS OF CONDUIT BOX, EQUALIZER PLATE, AND SHOE BOLT HEADS ARE REVERSED.

THIRD ANGLE PROJECTION

SURFACE FINISH 63 UNLESS OTHERWISE SPECIFIED

TOLERANCE ALLOWANCE UNLESS OTHERWISE SPECIFIED:
+/– 0.010 ON 2 PLACE DECIMALS
+/– 0.005 ON 3 PLACE DECIMALS
+/– 0.0005 ON 4 PLACE DECIMALS
+/– 30 MIN. ON ALL ANGLES

COPYRIGHT © 2006 AMETEK AUTOMATION & PROCESS TECHNOLOGIES. ALL RIGHTS RESERVED. DRAWING IS PROPERTY OF AMETEK AUTOMATION & PROCESS TECHNOLOGIES. UNAUTHORIZED USE, DUPLICATION OR DISTRIBUTION IS STRICTLY PROHIBITED BY FEDERAL LAW.

AMETEK®
AUTOMATION & PROCESS TECHNOLOGIES
Clawson, MI 48017 U.S.A.

DR. J.S.B.
DATE 4/12/91
APP. GSL
DATE 3/8/06
SCALE 3/8

TITLE
DIMENSION DRAWING
TM1035 BRAKE

DRAWING NO.	REV.	SIZE
E010234001	B	C