REVISION			
REV.	DESCRIPTION	DATE	BY
D	REDRAWN TO CAD	10/19/06	GSL

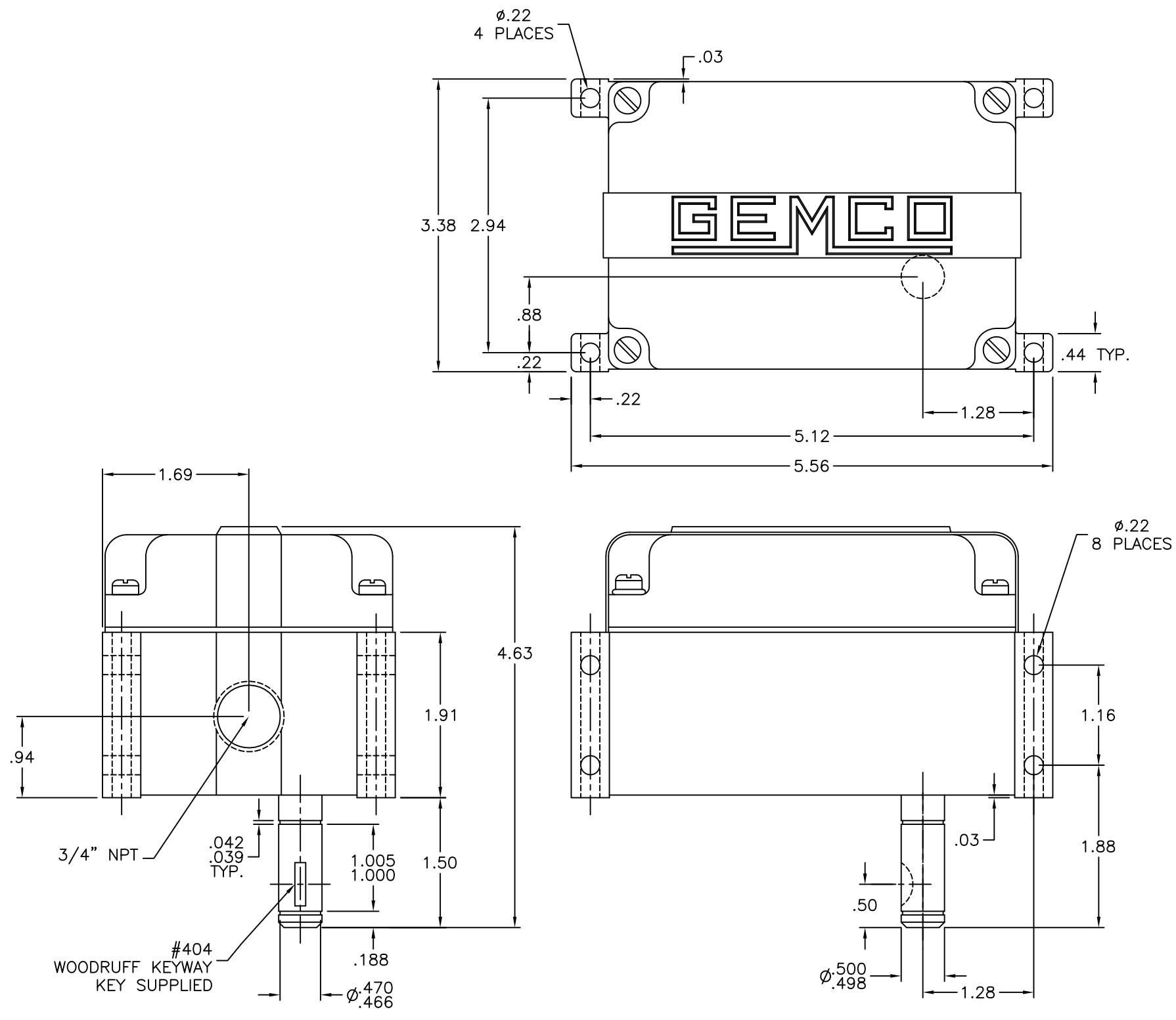

THIRD ANGLE PROJECTION

SURFACE FINISH 63
UNLESS OTHERWISE SPECIFIED

TOLERANCE ALLOWANCE
UNLESS OTHERWISE SPECIFIED:
+/- 0.010 ON 2 PLACE DECIMALS
+/- 0.005 ON 3 PLACE DECIMALS
+/- 0.0005 ON 4 PLACE DECIMALS
+/- 30 MIN. ON ALL ANGLES

COPYRIGHT © 2006 AMETEK AUTOMATION & PROCESS TECHNOLOGIES. ALL RIGHTS RESERVED. DRAWING IS PROPERTY OF AMETEK AUTOMATION & PROCESS TECHNOLOGIES. UNAUTHORIZED USE, DUPLICATION OR DISTRIBUTION IS STRICTLY PROHIBITED BY FEDERAL LAW.

AMETEK®
AUTOMATION & PROCESS TECHNOLOGIES
Clawson, MI 48017 U.S.A.

DR. WILLIAMS
DATE 7/11/61
APP. GSL
DATE 10/19/06
SCALE FULL

TITLE
DRAWING DIMENSION
NEMA 1 & 12 RLS UNITS
SPUR GEAR STYLE

DRAWING NO.	REV.	SIZE
D-0003400	D	C