SD0439600L __ Length in Feet

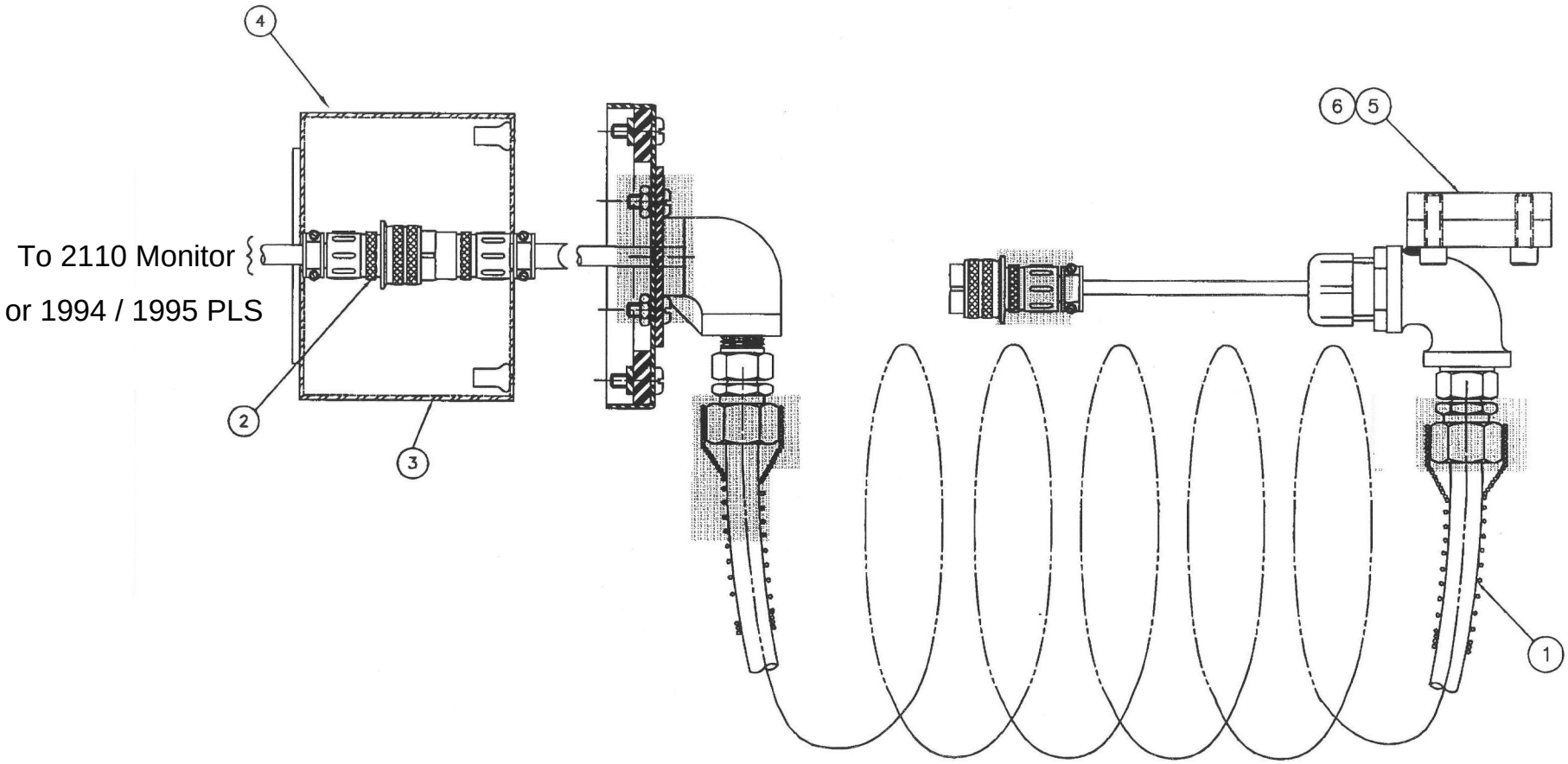

NOTES: UNLESS OTHERWISE SPECIFIED

1. ITEM 2 CABLE LENGTH AS SPECIFIED BY PART NUMBER.
2. COMPLETE PART NUMBER IS SD0439600LXX WHERE XX = CABLE LENGTH IN FEET.

ITEM	PART NUMBER	DESCRIPTION	QTY
6	04560089	SCREW SKT HD 1/4-20 X 3/4'	4
5	M0750200	TAPPING BLOCK	1
4	NP0171000	LABEL	1
3	SD0402100	JUNCTION BOX	1
2	SD0401600LXX	CABLE ASSY PLS TO JBOX	AS REQ'D
1	SD0488500	CABLE ASSY RESOLVER TO BOX	1

DWN.	K.A.	TITLE	CABLE TERMINATION KIT RESOLVER
DATE	3/12/98		
APP.			
DATE			
SCALE	NONE	DWG. NO. SD0439600	REV. D / SIZE C